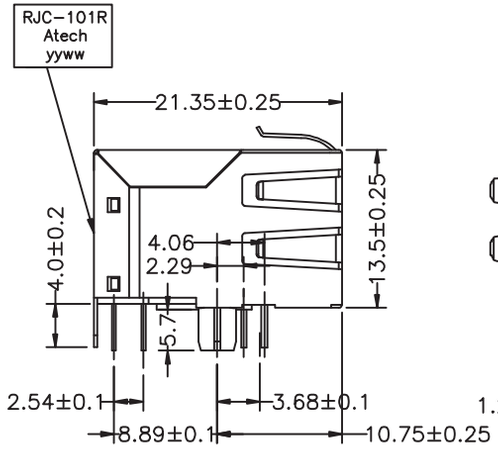

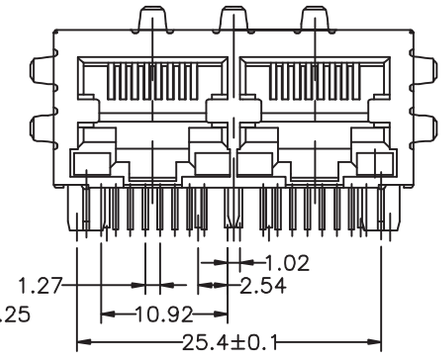

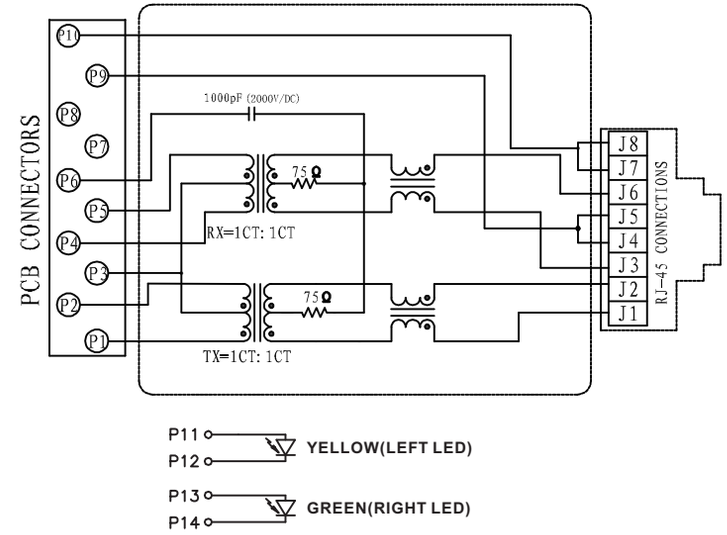

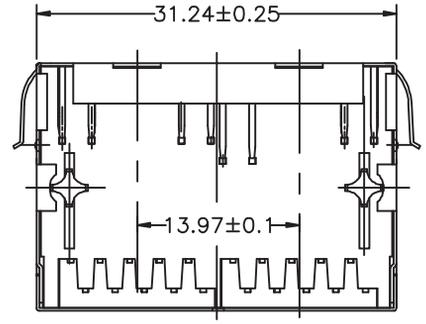

ELECTRICAL CHARACTERISTICS :

1. TURNS RATIO : TX/RX = 1CT : 1CT ±3%.
2. HI-POT : 1500 Vrms.
3. OCL (@100KHz / 0.1Vrms, WITH 8MA DC BIAS) : 350uH MIN.
4. INSERTION LOSS (@0.1-100MHz) = -1.2 dB MAX.
5. RETURN LOSS : 1~30MHz = -18dB MIN.
   30~60MHz = -14dB MIN.
   60~80MHz = -12dB MIN.
6. CROSS TALK (@1-100MHz) = -30dB TYP.
7. CMRR (@0.1-100MHz) : -30dB TYP.
8. OPERATING TEMPERATURE RANGE : -40°C~+85°C
9. STORAGE TEMPERATIRE RANGE : -40°C~+85°C
10. PoE RATING : 30W, 720mA , 48V (FOR PoE+ PRODUCTS ONLY)
11. RoHS COMPLIANT

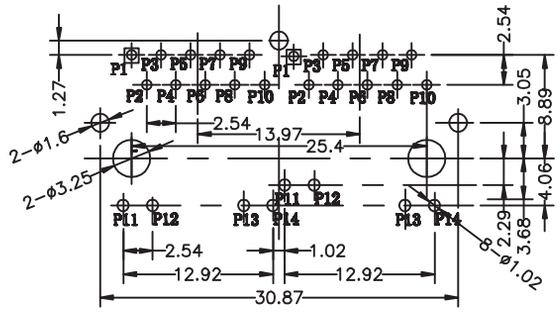

P.C.B RECOMMENDED HOLE LAYOUT SEEEN FROM COMPONENT SIDE.
ALL CENTERLINE DIMENSIONS ARE BASIC

NO:	DESCRIPTION	DATE	BY	CHK	APPD
	RELEASE	02/15/2015	SHIRLEY	BETTY	BETTY

REVISIONS

AOEM. Inch

TITLE: RJ45 1*2 W/TRANSFORMER 10/100 W/LED FOR PoE+

DWG. NO.: RJC-101R

UNITS: M/M

SAFETY:

SHEET 1 OF 1

DATE: 02/04/15

P/N:

DRAW: SHIRLEY